MAYTONI
DECORATIVE LIGHTING

Instruction

C084CL-15W3K-D-W

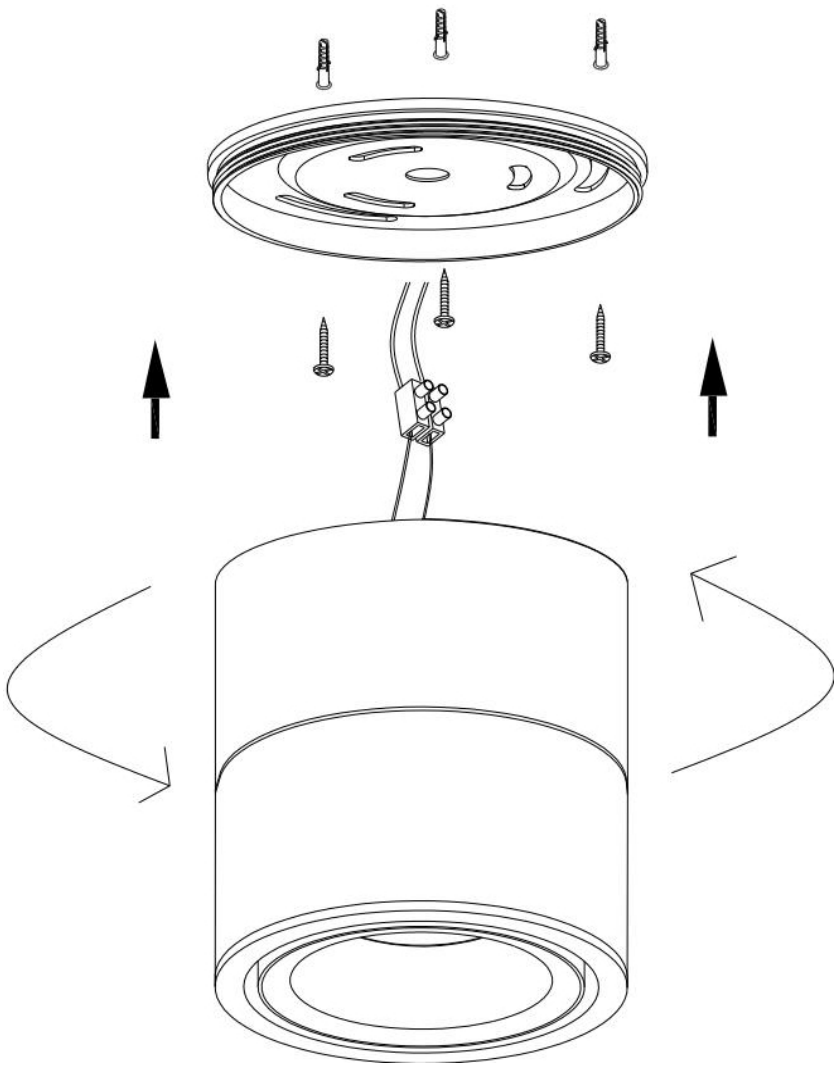

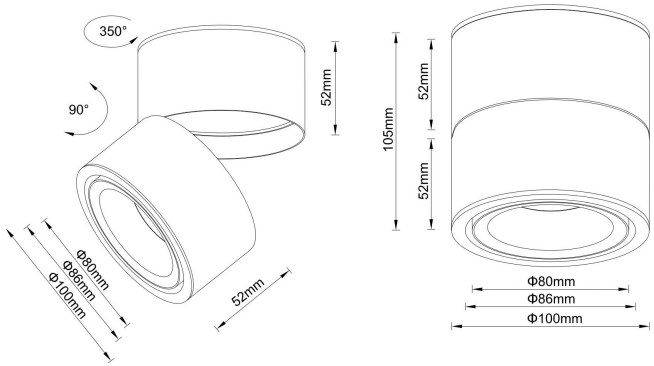

LED

MAX 15W
1 020 Lumen

Model: C084CL-15W3K-D-W
Collection: Ceiling
Series: Yin
Ceilling Lamps

This product contains a light source of the energy efficiency class F