MAYTONI
DECORATIVE LIGHTING

Instruction

MOD314WL-L13G3K

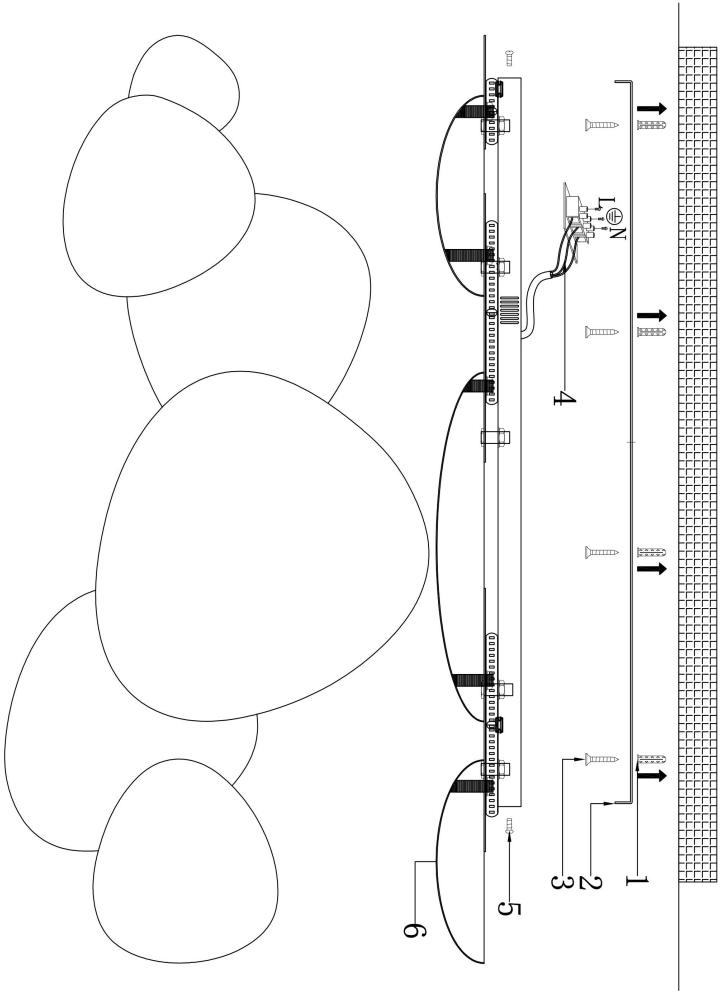

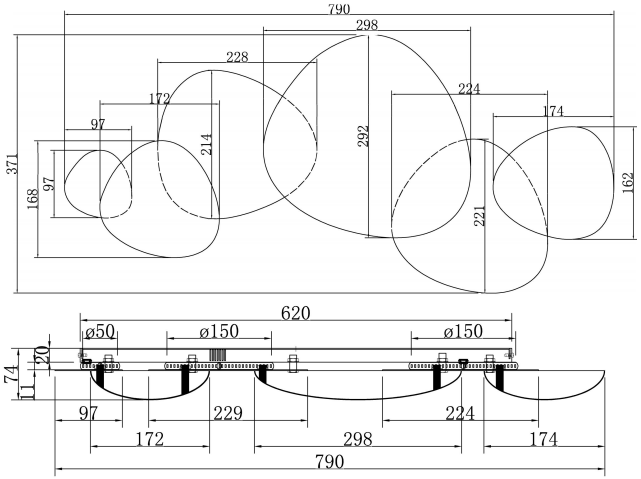

MAX 13W
550 Lumen

Model: MOD314WL-L13G3K
Collection: Modern
Series: Jack-stone
Wall Lamps

This product contains a light source of the energy efficiency class G