MAYTONI
DECORATIVE LIGHTING

Instruction
MOD097WL-02CH

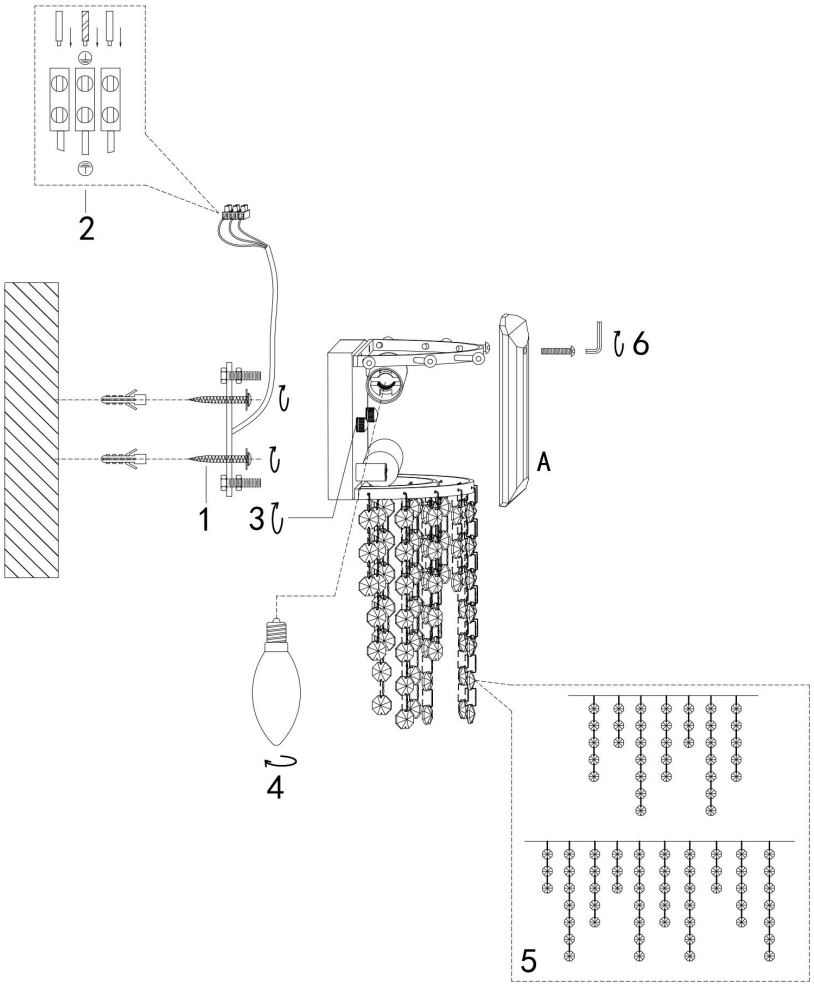

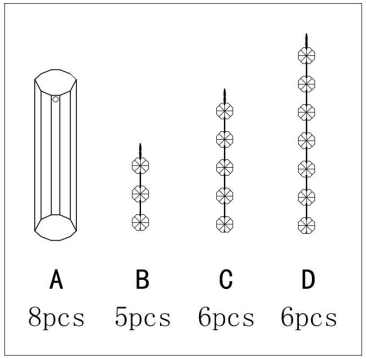

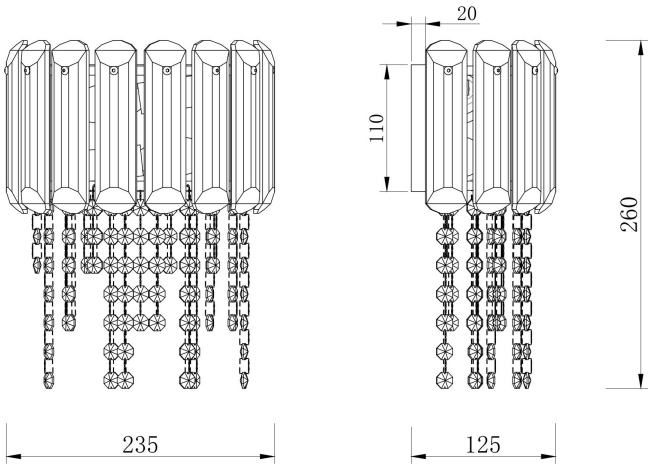

2xE14 40W

Model: MOD097WL-02CH
Collection: Neoclassic
Series: Hail
Wall Lamps