MAYTONI
DECORATIVE LIGHTING

Instruction

MOD544WL-01B

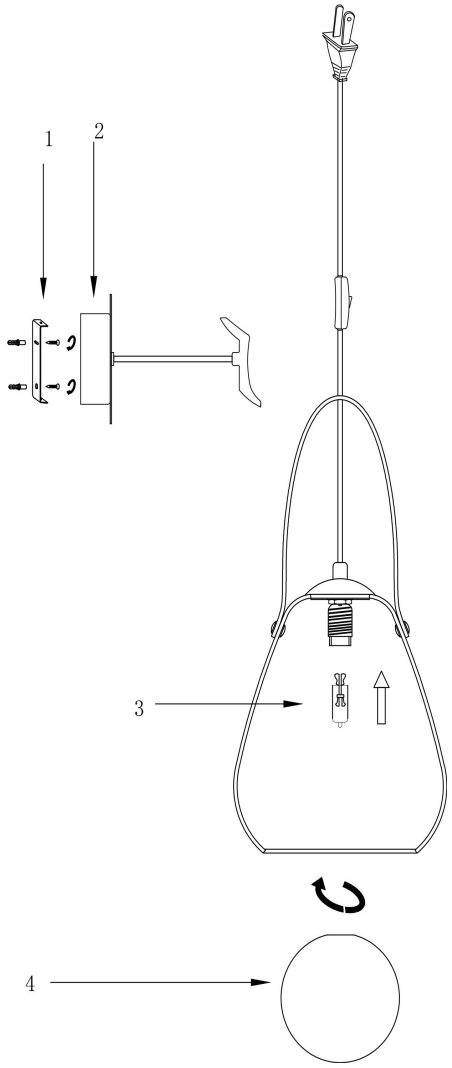

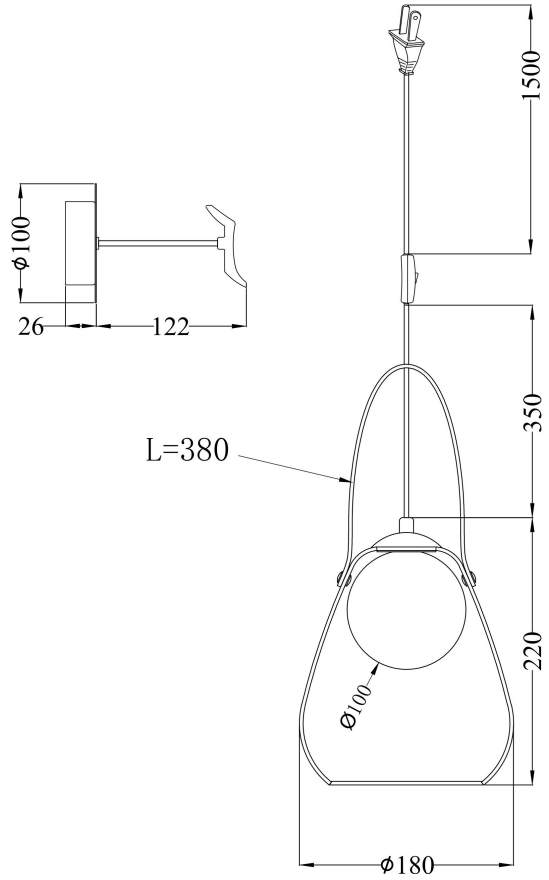

1xG9 28W

Model: MOD544WL-01B

Collection: Modern

Wall Lamps