MAYTONI
DECORATIVE LIGHTING

Instruction

MOD527PL-06N

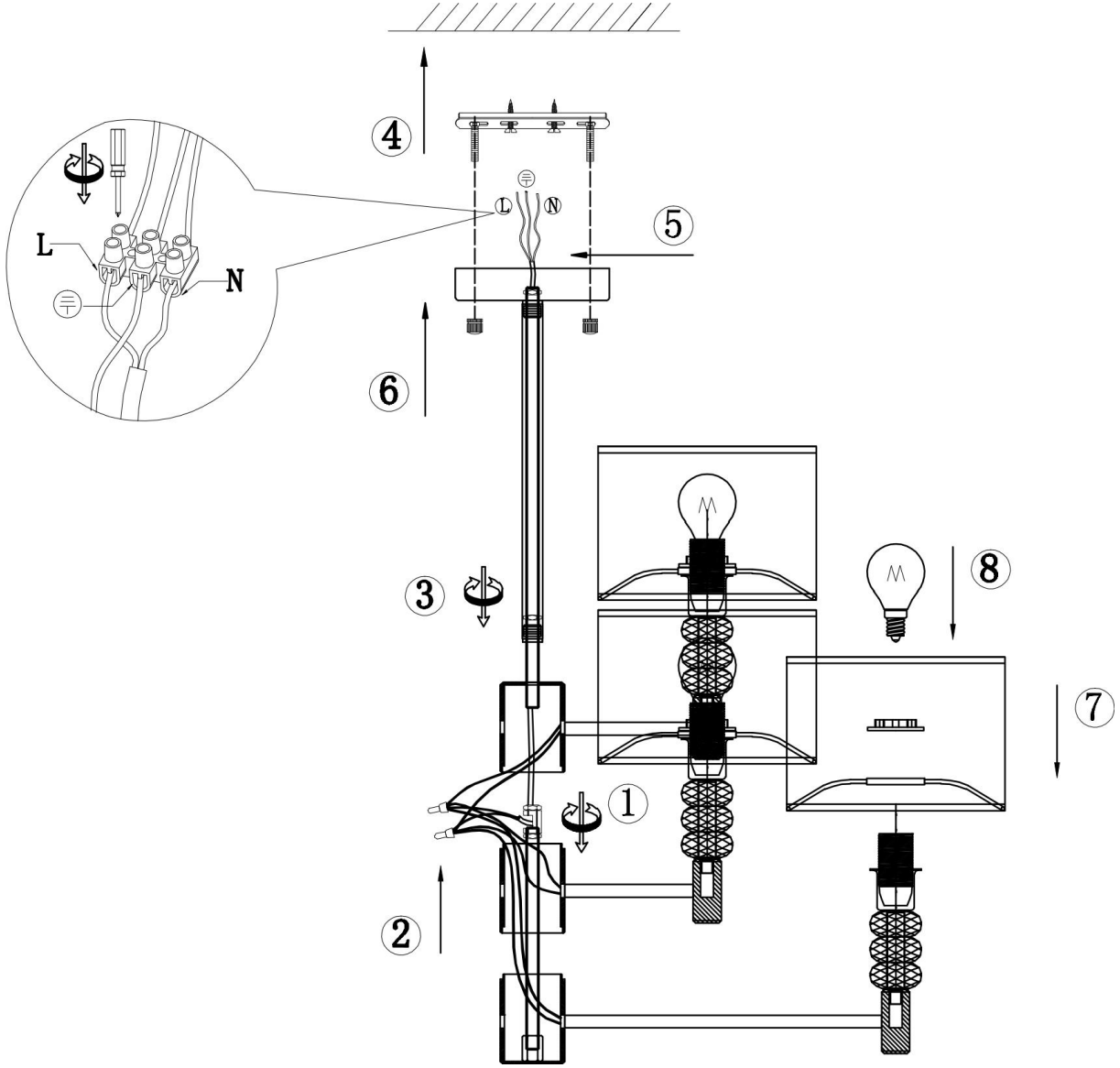

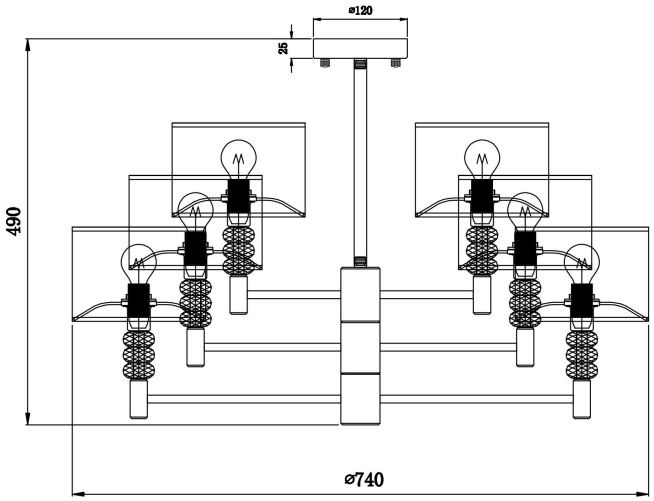

6xE14 40W

Model: MOD527PL-06N
Collection: Modern
Series: Lincoln
Pendant Lamps